Meshes for RoentDek MCP detectors

RoentDek Handels GmbH

Supersonic Gas Jets
Detection Techniques
Data Acquisition Systems
Multifragment Imaging Systems

RoentDek provides two types of meshes for mounting in front of MCP stacks with different sizes.

The free-standing meshes **Mesh40** and **Mesh80** for the 40 mm and 80/75 mm detector sizes (e.g. *DLD40*, *DET40, DLD80, Hex75*) are formed as bee-hive patterns etched out of UHV-compatible 0.05 mm thick Cu-alloy sheets. The hexagonal-shaped cells have about 1mm mean diameter (center-to-center 0.95 mm) with a nominal obstacle width of 0.08 mm, yielding an optical transmission of about 84%.

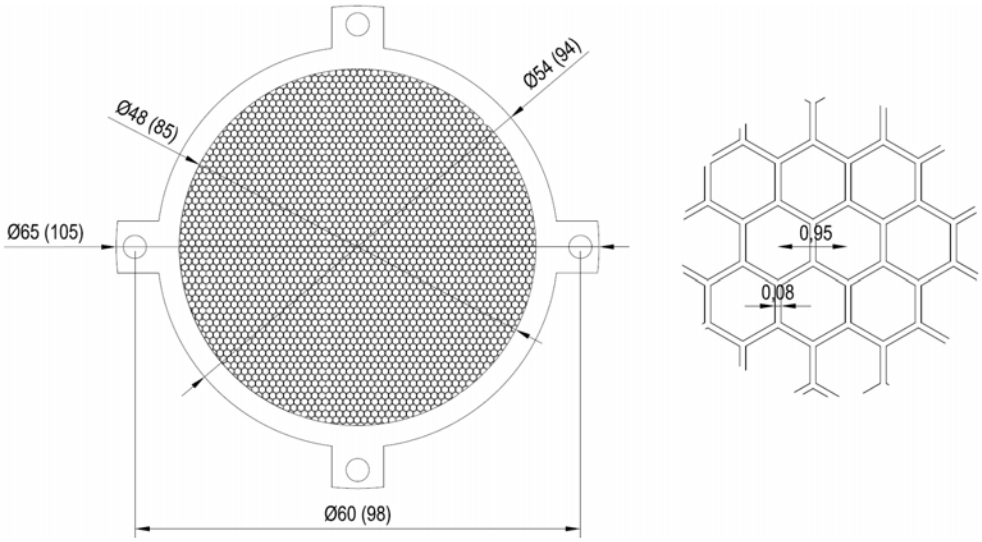

Figure 1: Mesh40/80 (displayed here: Mesh40) showing all dimensions (for Mesh80 in parentheses if different) *

Some applications require smaller open cells to minimize micro-lensing effects, e.g. if the mesh is used to define/separate regions with different electrostatic field gradients. For such applications the (woven) stainless steel meshes **wMesh40/80/120** with 77% optical transmission can be provided. Their micro-structure is formed by 0.14mm square cells (0.02mm wire, center-to-center 0.16mm). This mesh material is clamped in 3mm thick round Aluminium frames (UHV compatible) with different diameters for the 40 mm, 75/80 mm and 120/100 mm detector sizes (i.e. also for *DLD120* and *Hex100*).

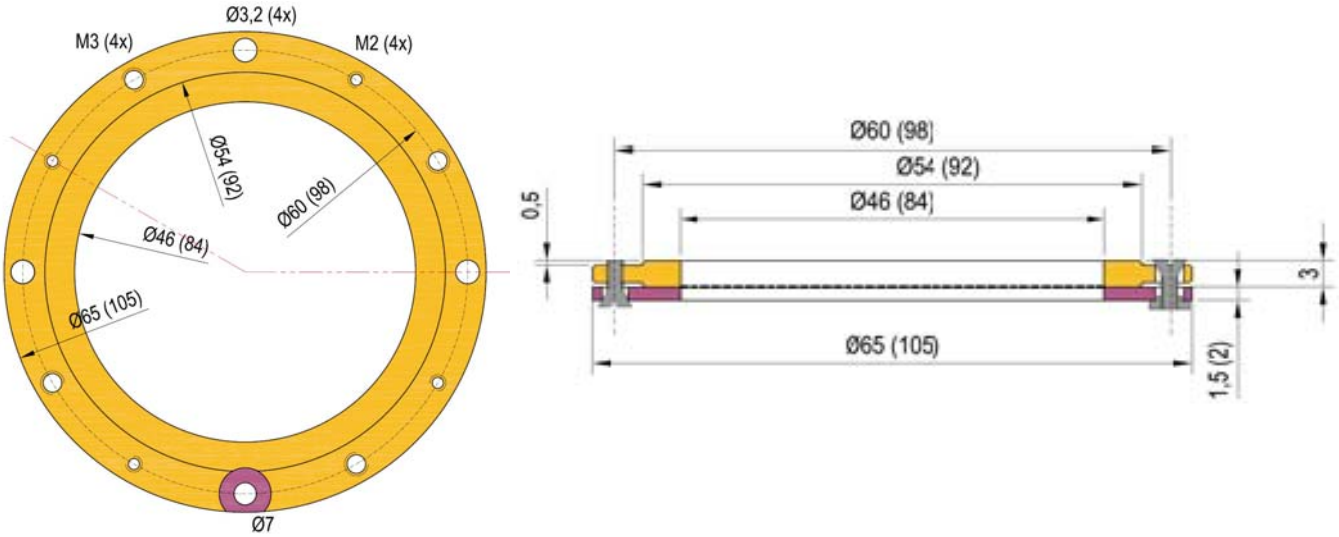

Figure 2: Sketch of wMesh40/80 (displayed here: wMesh40) showing all dimensions (for Mesh80 in parentheses if different). The RoentDek meshes can be mounted right onto the front ceramic ring (wMesh120: via spacers).

* **RoentDek** also provides etched calibration masks for determining detector linearity and resolution by a shadow projection..

Mesh mountings

Always use great care and do not touch the mesh or the MCP surface.

The **RoentDek** meshes (or masks) can be mounted right onto the front ceramic ring with the same M2 screws/recessed nuts as used for MCP contacting (for **wMesh120** see below). A mesh should be fixed on at least two (opposing) positions with the bias cable connected on one end. It is recommended to connect the mesh bias either via a blocking resistor placed very close to the mesh contact (i.e. in vacuum) or to use a *HFST*-type signal terminator. In case of operation with a *FT12TP* its "X" line can be used for biasing the mesh (includes signal terminator). Depending on details how the connecting scheme of the MCP bias contacts was made there may be mechanical conflicts to consider during mesh mounting.

Make sure that the mesh is not touching any other biased part of the detector assembly (and none of the spring clamps) and that sufficient distance is kept between detector parts biased at different potentials (> 500 V) relative to mesh potential. Allow at least 1 mm distance per 1000 V potential difference (even more in presence of sharp edges). Use extra insulation (e.g. with Kapton sheet) if distances are too small. The maximum voltage rating between mesh and MCP front potential is 2000 V if mounted right on the ceramic ring*.

If the mesh is bent or damaged corona discharges can appear between MCP and mesh which produce background and can damage the MCP stack.

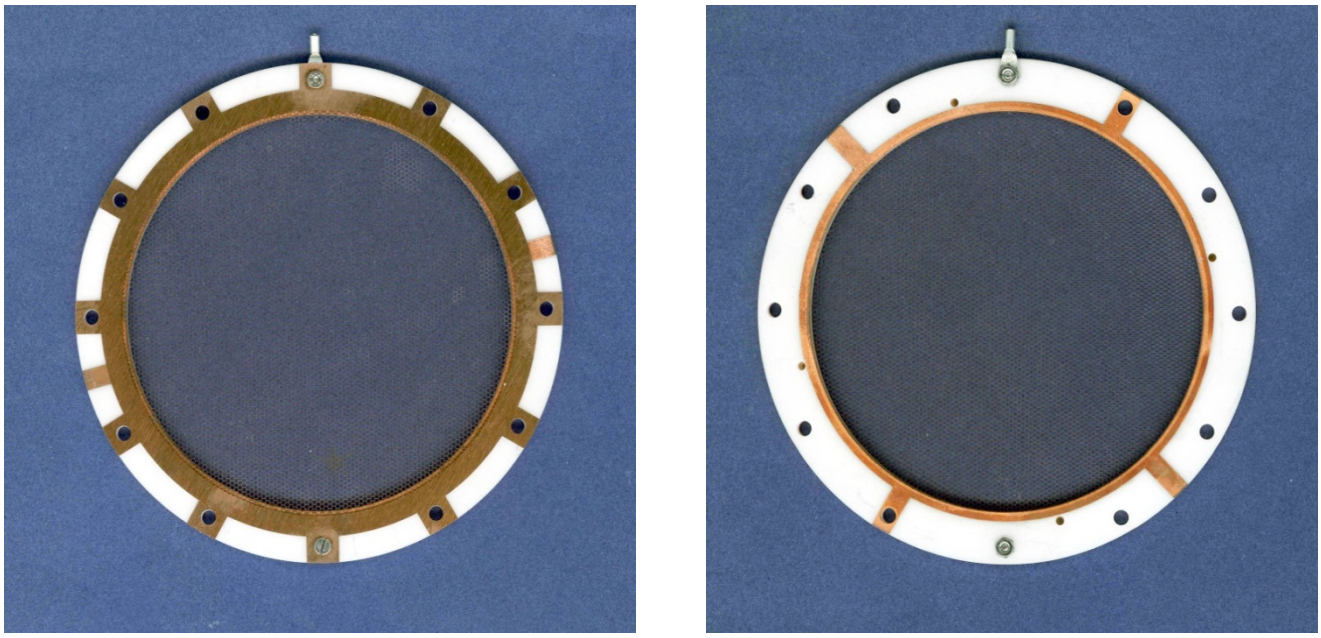

Figure 3: Free-standing Mesh80 mounted to the MCP front ring (left: front side, right rear side of the front ring). Unused lugs of the mesh can be cut away with scissors to avoid conflicts with other contact pins. A mesh can also be mounted at a greater distance from the MCP by introducing spacers.

RoentDek also provides etched calibration masks (e.g. pin-hole masks) for determining detector linearity and resolution by a shadow projection. The mounting of those to the ceramic rings of the MCP stacks is very similar to the mesh mounting as described above, i.e. the same precautions must be followed. The hexagonal meshes can also be used as calibration masks.

It is to note that parallax or lensing effects may disturb the shadow projection. A mask should therefore be mounted as close to the MCP front face as possible. Mounting the mask right onto (i.e. in physical contact with) the front MCP face is possible **but may damage the MCP surface.**

For mounting a **wMesh** on a detector, the same precautions as described above must be considered. The 3 mm thick mesh-clamping frame is shaped so that the spring clamps on a mounted MCP stack are not touched (for mounting the **wMesh120** see below). A 7 mm cut-out is provided to allow a contact screw (e.g. from MCP front contact) to protrude towards the detector front side without touching the mesh.

---

* for **wMesh120** the maximum voltage depends on the distance as set by the spacers.

Figure 4: Picture of wMesh40 mounted on a ceramic ring (for mounting options see text below). The cut-out is at the position of MCP front contact. The mesh contact can be made as described for the free-standing meshes or by using the M2 holes as shown here (lower left corner).

There are two methods of mounting a **wMesh** on the corresponding MCP holding ceramic rings supported. First, the position of the mesh most be chosen, either facing towards the MCP stack (usually recommended, see Figure 2) or placed on the far side. Ideally, a **wMesh** is fixed by a countersunk screw (M2x6) via the M2 holes onto the ceramic ring (see left side of the cut in Figure 2). This, however, requires disassembling a pre-mounted MCP stack. For mounting of a **wMesh40/80** on a pre-assembled detector the 3 mm holes can be used for fixing the mesh via recessed M2 nuts and (M2x5) countersunk screws, as done for contacting the MCP stack (right side of the cut in Figure 2 and Figure 4).

Of course, a **wMesh** can also be placed at a greater distance from the MCP by introducing spacers.

For mounting a **wMesh120** onto the metal front ring of a *DLD120* or *Hex100* it is required to care for insulation, i.e. via the ceramic eyelets/standoffs provided: Three of the M3 PEEK screws (at relative 120° angle) must be removed from the assembled MCP stack and the standoffs are then placed at these positions. Now the **wMesh120** can be placed onto the standoffs and fixed with (longer) M3 PEEK screws guided through the eyelets or standoffs. Use great care when fixing the screws and avoid excessive force during tightening those (see detector manual for *DLD120/Hex100* MCP mounting).The **wMesh120** can be contacted in the same way as the MCP front ring.

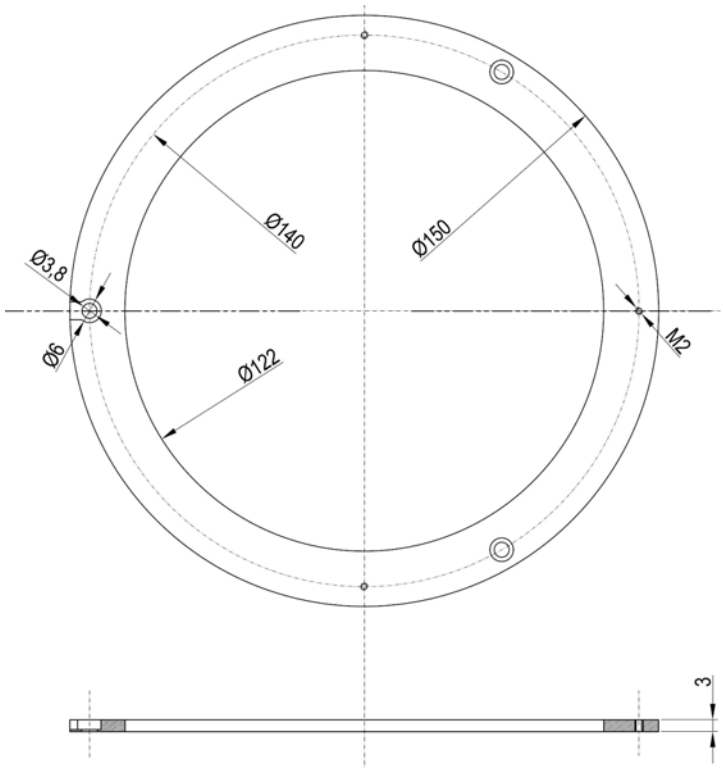

Figure 5: Sketch of wMesh120
(for mounting options see text above)